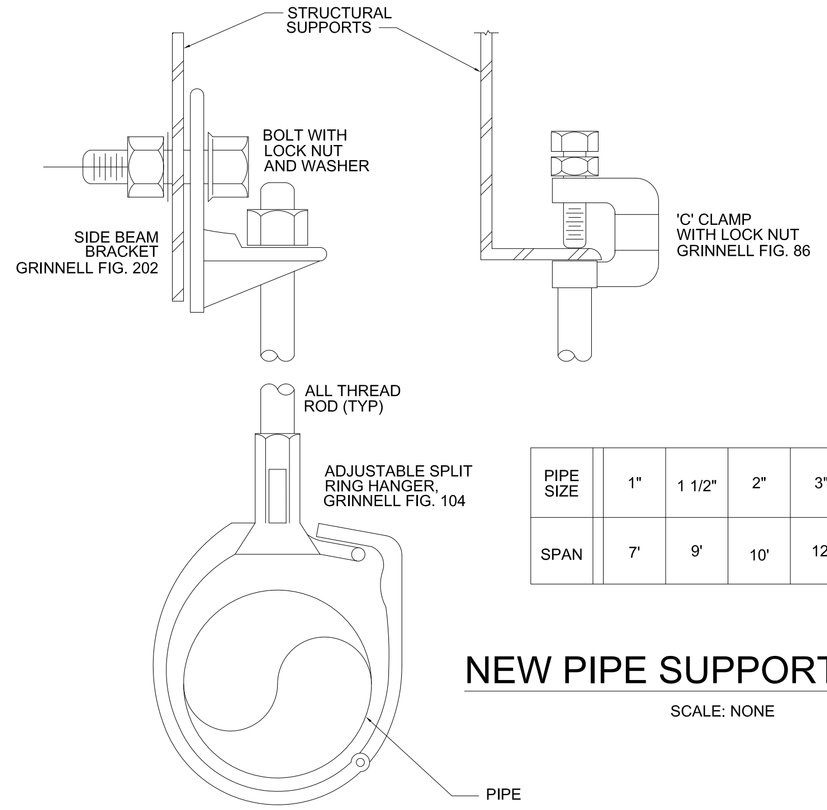

PIPE SIZE	1"	1 1/2"	2"	3"	4"
SPAN	7'	9'	10'	12'	14'

NEW PIPE SUPPORT DETAIL

SCALE: NONE

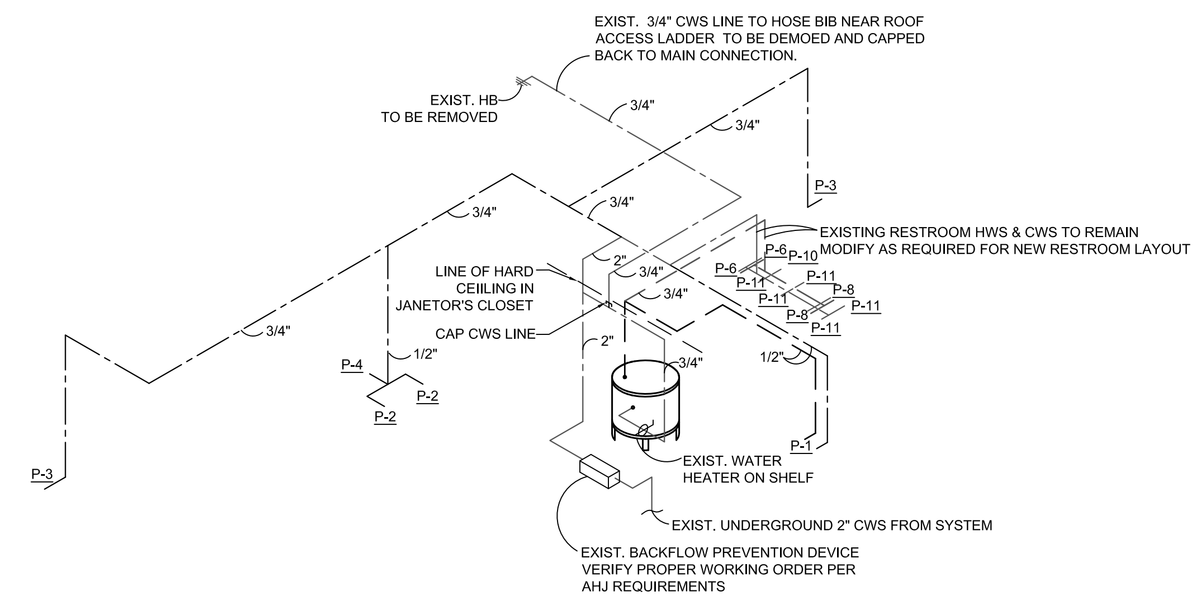

WATER SUPPLY RISER

SCALE: NONE

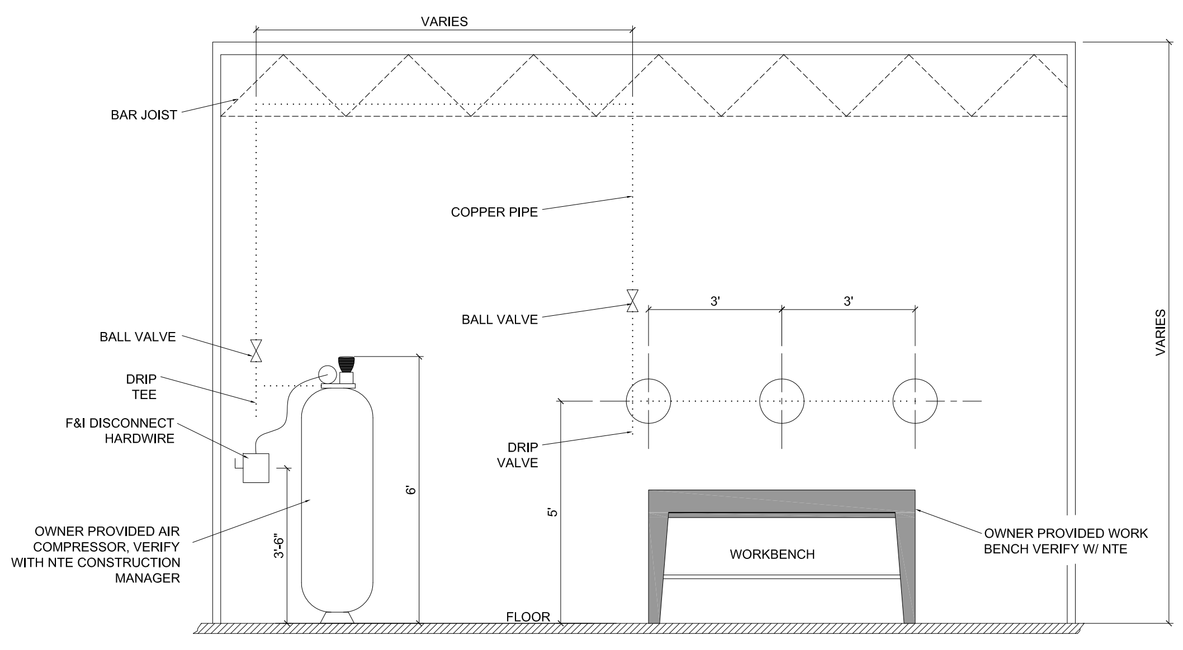

AIR COMPRESSOR WORKBENCH ELEVATION

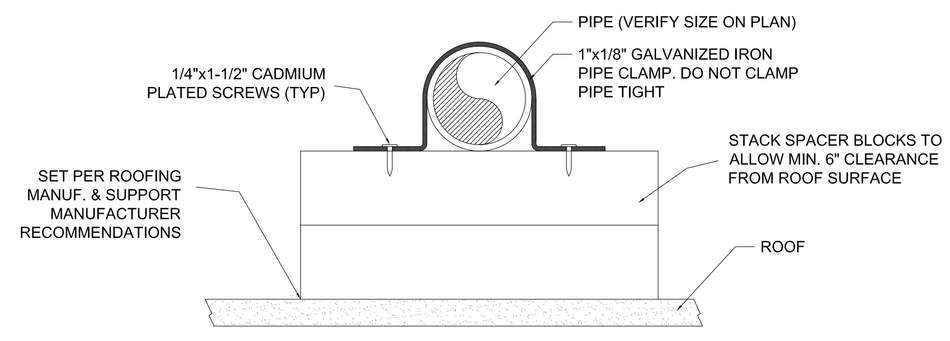

NEW ROOF PIPE SUPPORT DETAIL

APPLICABLE TO LANDLORD RE: ARCH. SPEC. 01030 FOR ALTERNATE WORK

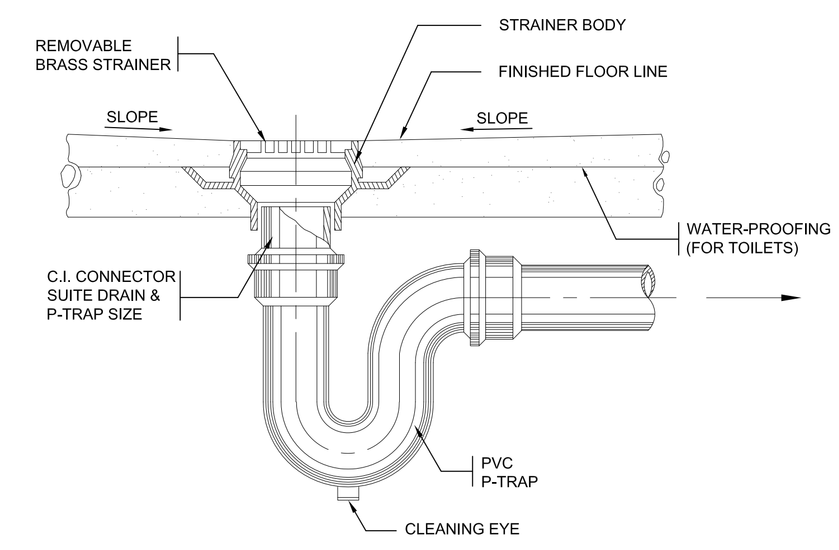

NEW FLOOR DRAIN DETAIL

SCALE: NONE

THIS DOCUMENT IS ISSUED FOR BIDDING PURPOSES ONLY. THE GENERAL CONTRACTOR AND HIS/HER SUBCONTRACTOR SHALL UTILIZE SIGNED SEALED & DATED CONTRACT DRAWINGS APPROVED BY THE CITY OR JURISDICTION FOR CONSTRUCTION PURPOSES.

BY: HD ENGINEERING & DESIGN, INC.
ISSUE DATE: 4 FEBRUARY 2011

Interior Tenant Finish

NORTHERN TOOL + EQUIPMENT

12120 West 95th Street Lenexa, Kansas 66215

copyright © 2011 HDE, Inc.

HD Engineering & Design, Inc.
6100 Nieman, Suite 200
Shawnee, Kansas 66203
913.631.2222
10783 SW Canterbury Ln., St 104
Tigard, OR 97224
971.645.0901

Project Number: 3016
Date: 4 FEB. 2011
Revised:
Drawn By: CLS
Sheet Number: P 4
Sheet Title: PLUMBING DETAILS & RISERS